

NoiseBloc™ Eco

Recycled Plastic Acoustic Barrier

A panel-and-post noise barrier made from 225×45mm boards of 95% recycled plastic, locked together with H-section profiles and held between galvanised steel posts. It will not rot, warp or twist, carries a declared 40-year service life, and is available with a reflective or an absorptive face for highways, rail, energy, industrial and commercial sites.

26dB
DL_R reflective
BS EN 1793-2

30dB
DL_R absorptive, with
DL_α 9dB (BS EN 1793-1)

13.2kg/m²
Superficial mass
reflective, dry (tested)

40years
Declared acoustic and
non-acoustic service life

KEY SPECIFICATION

System type	Panel-and-post barrier, reflective or absorptive
Acoustic boards	225×45mm recycled plastic, laid horizontally between posts
Board joints	Locking H-section profile at every joint
Material	95% recycled plastic, UV-stabilised
Posts	Galvanised steel UB at 3.0m maximum centres (see page 4)
Sealing and fixing	Foam seal to post flange; packing beams with stainless steel anti-vandal fixings
Barrier height	From 1.8m in 225mm increments; post schedule to 4.5m, taller on request
Foundations	Posts set in concrete, or base-plated
Colours	Six standard RAL colours (see page 5)
Conformity	Declaration of Performance to BS EN 14388:2005

WHY SPECIFY IT

- **Independently tested** to BS EN 1793 (acoustic) and BS EN 1794 (non-acoustic) by UKAS-accredited and Notified Body laboratories. Declaration of Performance available on request.
- **Built to last:** declared 40-year service life, acoustic and non-acoustic. No rot, no painting, no preservative treatment.
- **Lower carbon, circular material:** 95% recycled plastic, manufactured in the UK.
- **Fast, safe installation:** boards weigh about 10kg each and lock together by hand, with no specialist tools.
- **Reflective or absorptive:** absorptive face (DL_α 9dB) where reflected noise matters.
- **Class 1** resistance to brushwood fire. Flat-faced, anti-climb design with matching gates.

TYPICAL APPLICATIONS

Highways and rail corridors · Battery energy storage (BESS), solar and substation sites · Industrial and commercial premises · Plant and heat pump screening · Residential boundaries

ALSO AVAILABLE

Pedestrian and vehicle gates · NoiseBloc™ Premium TGV Reflective · NoiseBloc™ Board & Batten Reflective and Absorptive

Standard details

Drawing NB-ECO-SD01 Rev A · reduced from A3, do not scale · DXF and A3 PDF available on request

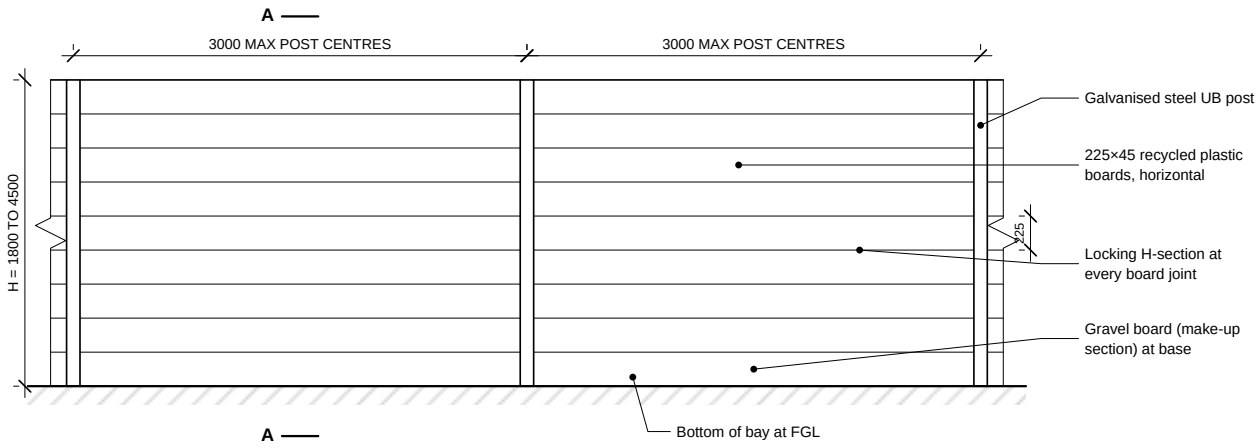

EC-01 TYPICAL FRONT ELEVATION — **SCALE 1:50**

NoiseBloc™ Eco Acoustic Barrier

ATF Supplies Nationwide Ltd · 01264 366211 · atfsuppliesuk.com

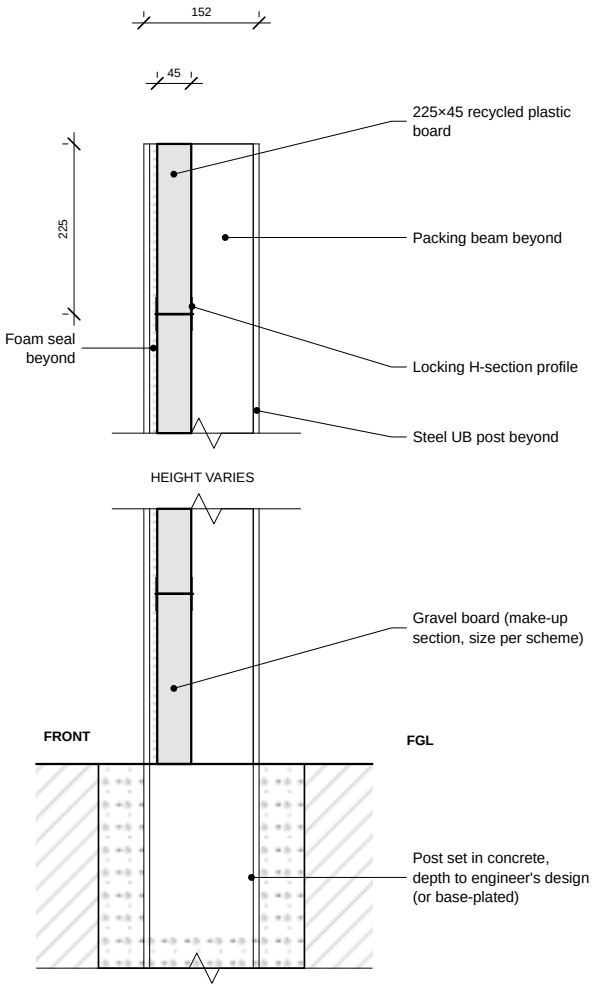

EC-02 SECTION A-A THROUGH BAY — **SCALE 1:10**

NoiseBloc™ Eco Acoustic Barrier

ATF Supplies Nationwide Ltd · 01264 366211 · atfsuppliesuk.com

Drawing notes

1. All dimensions in mm. Typical details only; barrier height, post sizes and setting out to project drawings.
2. 225×45 recycled plastic boards laid horizontally between steel UB posts at 3000 maximum centres. Posts must not exceed the stated centres when installed.
3. Gravel board (make-up section) at the base of every bay; quantity and size confirmed by ATF for each scheme. Bottom of bay at finished ground level.
4. Locking H-section profile at every board joint, tapped home with a rubber mallet.
5. Self-adhesive foam seal on the inner face of the front post flange, approximately 10 from the flange edge.
6. Packing beams knocked home behind the boards and fixed through the rear flange with M5 Torx head stainless steel anti-vandal fixings. Post fixing holes to the rear of the barrier.
7. Post shown is 152×89×16 UB. Post size from the schedule on page 4 or the structural engineer's design; foundations to the engineer's design.
8. Absorptive boards use the same post, seal and fixing details, with the absorptive face towards the noise source.

Using these details

Each detail carries its own reference and the NoiseBloc™ and ATF Supplies details, so it can be copied straight into project drawings and specifications. CAD files (DXF) and the full A3 drawing sheet are available from ATF on request.

Standard details: plan and joint

Drawing NB-ECO-SD01 Rev A · reduced from A3, do not scale

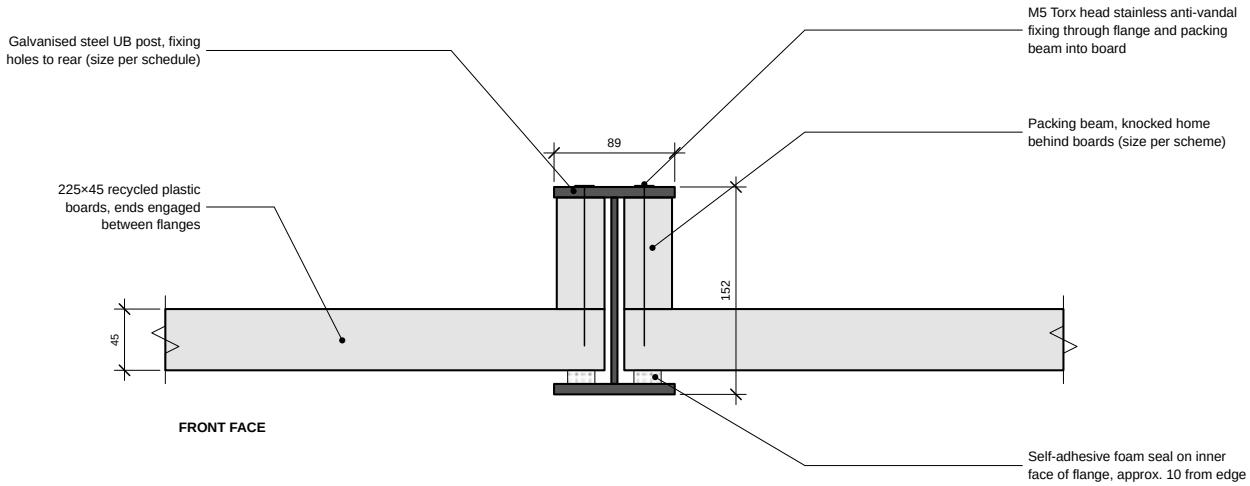

EC-03 PLAN AT INTERMEDIATE POST — **SCALE 1:5**

NoiseBloc™ Eco Acoustic Barrier

ATF Supplies Nationwide Ltd · 01264 366211 · atfsuppliesuk.com

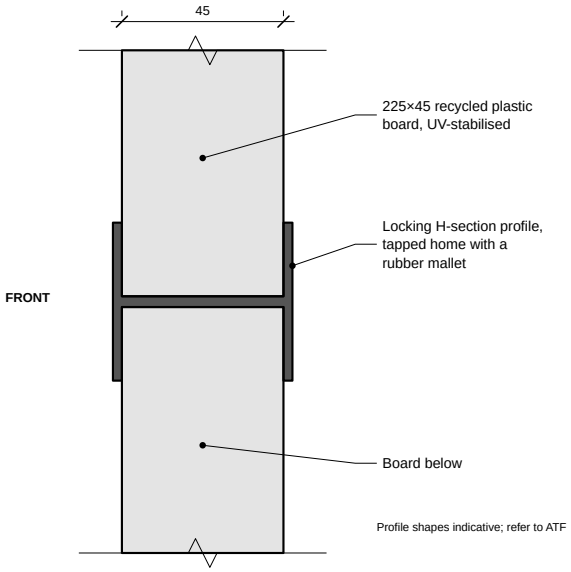

EC-04 BOARD JOINT (SCHEMATIC) — **SCALE 1:2**

NoiseBloc™ Eco Acoustic Barrier

ATF Supplies Nationwide Ltd · 01264 366211 · atfsuppliesuk.com

How the system goes together

1. **Set out the posts** accurately, plumb and in line, at no more than the design centres (3.0m maximum), with fixing holes to the rear.
2. **Apply the foam seal** to clean, dry steel on the inner face of the post flange, about 10mm from the edge. Apply it just before the boards go in, one bay at a time.
3. **Drop in the gravel board** at the bottom of the bay and fit a locking H-section along its top edge.
4. **Build up the bay:** place each board into the H-section, tap home with a rubber mallet, and fit the next H-section, until the bay reaches full height.
5. **Fit the packing beams** behind the boards, knock them home, and fix through the post with M5 Torx head stainless steel anti-vandal fixings long enough to pass through the beam and pick up the boards.
6. **Walk the line:** check the seal at every post, the base and each joint for gaps.

Packing beam sizes, gravel board sizes and fixing lengths depend on the post size and are confirmed by ATF for each scheme. Full installation guide available from ATF.

UB POST DIMENSIONS FOR DETAILING

Post (UB)	Depth D	Flange width B	Clear depth between flanges	Space for seal and packing beam clear depth less 45mm board	Board bearing each side of web (B − web) ÷ 2, max.
127×76×13	127	76	112	67	36
152×89×16	152	89	137	92	42
178×102×19	178	101	162	117	48
203×102×23	203	102	185	140	48
203×133×30	207	134	188	143	64

All dimensions in mm, nominal section sizes to BS 4-1. Packing beam and gravel board sizes are confirmed by ATF for each scheme to suit the post section.

Components and materials

Component	Size (mm)	Specification	Function
Acoustic board	225×45	95% recycled plastic, UV-stabilised; reflective or absorptive face; about 10kg per 3.0m board	Acoustic infill
Gravel board	Per scheme	Recycled plastic make-up section	Base of each bay, sets final height
H-section profile	To suit board	Locking profile, full board length	Locks boards and seals each joint
Foam seal	Strip	Self-adhesive expanding foam	Seals boards to the post flange
Packing beam	Per scheme	Sized to fill the gap between the boards and the rear flange	Holds boards tight in the post
Post	UB, see schedule	Steel universal beam, hot-dip galvanised to BS EN ISO 1461	Structure
Fixings	M5, length to suit	Torx head anti-vandal, stainless steel, through the rear flange and packing beam into the boards	Secure, tamper-resistant fixing

SUPERFICIAL MASS

Acoustic element	Reflective	Absorptive
Dry	13.2kg/m²	14.5kg/m²
Reduced wet	13.7kg/m²	20.8kg/m²
Wet	13.8kg/m²	23.8kg/m²

Self-weight of the acoustic element tested to BS EN 1794-1 (declared as 0.129, 0.134 and 0.135kN/m² reflective; 0.142, 0.204 and 0.233kN/m² absorptive). Posts excluded.

WIND, NOT WEIGHT, SIZES THE POSTS

Post size is governed by the wind load on the face of the barrier. The schedule below gives the normal (wind) load each post can carry at 3.0m centres. Compare it with the design wind pressure for the site, calculated to BS EN 1991-1-4.

The acoustic boards are tested to a normal load of 1.0kN/m² (BS EN 1794-1). Where the site design pressure is higher, or for coastal, hilltop or exposed sites, refer to ATF.

POST SCHEDULE (galvanised steel UB at 3.0m centres, manufacturer's declared capacities)

Barrier height	Post size (UB)	Normal load capacity kN/m², SLS	Distributed load kN/m, ULS	Snow clearance load kN/m, SLS
1.5m	127×76×13	4.3	23.2	13
2.0m	127×76×13	2.4	23.2	12
2.5m	127×76×13	1.6	23.2	10
3.0m	127×76×13	0.9	23.2	10
3.5m	152×89×16	0.95	33.8	14
3.5m	178×102×19	1.4	47.0	21
4.0m	178×102×19	0.9	47.0	21
4.0m	203×102×23	1.3	64.4	28
4.5m	203×102×23	0.95	64.4	28
4.5m	203×133×30	1.1	83.9	31

Designed in accordance with BS EN 1990, BS EN 1991-1-1, BS EN 1993-1-1 and BS EN 1794-1. Where two post sizes are shown for a height, the heavier section carries a higher wind load; choose the section whose normal load capacity meets the site design pressure.

Structural design: please read

The schedule gives post capacities only. It does not assess the site wind load, foundations, base plates or holding-down bolts. **Post sizes, foundations and fixings must be confirmed by a structural engineer for each project.** ATF can arrange a site-specific structural design on request (chargeable).

Acoustic performance

NOISEBLOC™ ECO REFLECTIVE

DL_R = 26dB

Airborne sound insulation, BS EN 1793-2:2012, rated with the normalised road traffic noise spectrum of BS EN 1793-3

NOISEBLOC™ ECO ABSORPTIVE

DL_R = 30dB DL_α = 9dB

Airborne sound insulation, BS EN 1793-2:2012. Sound absorption, BS EN 1793-1

DECLARED PERFORMANCE TO BS EN 14388:2005

Essential characteristic	Reflective	Absorptive	Test standard
ACOUSTIC			
Airborne sound insulation DL_R	26dB	30dB	BS EN 1793-2:2012
Sound absorption DL_α	Not applicable	9dB	BS EN 1793-1
MECHANICAL AND SAFETY			
Normal load, acoustic element (wind and static)	1.0kN/m²	1.0kN/m²	BS EN 1794-1
Dynamic load from snow clearance	12.7kN (2×2m)	12.9kN (2×2m)	BS EN 1794-1
Maximum vertical load, element	19.6kN/m	3.9kN/m	BS EN 1794-1
Impact of stones	Pass	Pass	BS EN 1794-1
Risk of falling debris	Class 3	Class 3	BS EN 1794-2:2003
Resistance to brushwood fire	Class 1	Class 1	BS EN 1794-2, BS EN 1794-3
Light reflection	Class 3	Class 3	BS EN 1794-2:2011
DURABILITY			
Service life, acoustic and non-acoustic	40 years	40 years	BS EN 14388
Change in DL_{RI} after 5, 10, 15, 20 years	0, 0, −1, −1dB	0, 0, −1, −1dB	Declared by manufacturer

Acoustic test references	Reflective DL_R: 41078-1 (April 2019). Absorptive DL_R: 4143-3848; DL_α: 4143-3849 (May 2019). Supporting tests 2.1/18-293-1 and -2
Tested by	Independent laboratories accredited by UKAS and EU Notified Bodies for BS EN 1793 and BS EN 1794. Declaration of Performance and reports available on request.

Reading the numbers

DL_R rates the sound insulation of the barrier construction itself, measured in a laboratory. **DL_α** rates how much sound the face absorbs rather than reflects. Neither is the noise reduction a receiver will hear on site, which depends mainly on barrier height and length, the positions of source and receiver, and the ground.

Choose the **absorptive** face where reflected noise matters: barriers on both sides of a road or railway, a barrier opposite homes or a building, or plant enclosed on several sides. Your acoustic consultant will confirm the height, extent and face needed for your site.

STANDARD COLOURS



Anthracite
RAL 7016

Basalt Grey
RAL 7012

Dusty Grey
RAL 7037

Brown
RAL 8017

Moss Green
RAL 6005

Bottle Green
RAL 6007

Colours shown are indicative only. Other colours on request, subject to quantity.

Specification clause

For inclusion in project specifications. Edit the bracketed items to suit the project.

Acoustic barrier

Supplier: ATF Supplies Nationwide Ltd, Boundary House, 36a Walworth Road, Andover, SP10 5LH. Tel 01264 366211.

Product reference: NoiseBloc™ Eco [Reflective] / [Absorptive].

Acoustic performance: Airborne sound insulation DL_R not less than [26dB] / [30dB] to BS EN 1793-2; [sound absorption DL_α not less than 9dB to BS EN 1793-1]. Performance declared to BS EN 14388:2005.

Construction: 225×45mm boards of 95% recycled plastic, UV-stabilised, laid horizontally between steel UB posts and locked at every joint with H-section profiles; gravel board make-up section at the base of each bay; self-adhesive foam seal to the post flange; packing beams fixed through the post with M5 stainless steel Torx head anti-vandal fixings.

Posts: Hot-dip galvanised steel UB to [the manufacturer's post schedule] / [the structural engineer's design] at [3.0] m maximum centres, [set in concrete] / [base-plated].

Height: [ ] m above finished ground level. **Length:** [ ] m. **Colour:** [RAL 7016 Anthracite].

Service life: Declared acoustic and non-acoustic service life of 40 years.

Installation: In accordance with the NoiseBloc™ Eco installation guide. The barrier shall be continuous and free from gaps.

CARE AND MAINTENANCE

- Clean with soapy water or a mild detergent. Use only recommended solvents to remove graffiti.
- Check periodically for damage from animals, birds, debris, vegetation, severe weather or vandalism, and replace damaged boards promptly.
- Keep a clear zone of about 1m either side of the barrier and remove vegetation growing on it.
- Wear gloves and eye protection when cleaning.

Environment	Clean every
Normal: urban, industrial, low-salinity coastal	12 months
Severe: industrial and coastal, moderate salinity and SO_2	6 months
Hazardous: aggressive industrial; within 1km of the coast	3 months

MATERIALS AND DURABILITY

Boards	95% recycled plastic, UV-stabilised. Will not rot, warp or twist; no painting or preservative treatment needed
Service life	40 years acoustic and non-acoustic, declared to BS EN 14388:2005
Posts	Hot-dip galvanised to BS EN ISO 1461, typically 40 years or more to first maintenance above ground in C2 to C3 environments, per BS EN ISO 14713-1
Fixings	Stainless steel
Manufacture	Made in the UK under an ISO 9001:2015 quality management system with independently audited factory production control

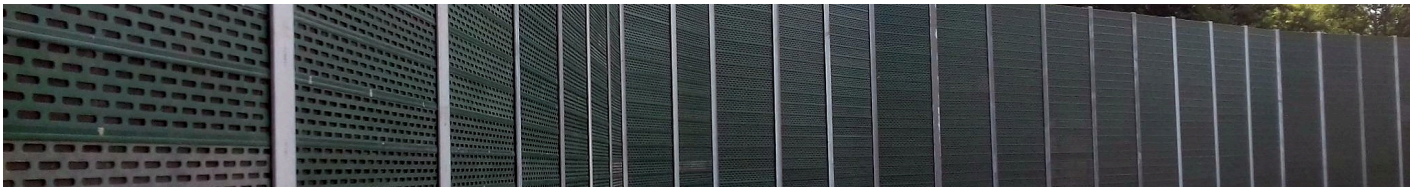

NoiseBloc™ Eco Absorptive on a curved alignment, with the absorptive face to the noise source.

DOCUMENTS AVAILABLE ON REQUEST

Declarations of Performance (reflective and absorptive) · Acoustic and non-acoustic test reports · Installation guide · Maintenance guide · A3 standard details (PDF) and CAD details (DXF) · Site-specific structural design (chargeable)

Important notes. Information in this datasheet is given in good faith and is correct at the date of issue. Declared performance is taken from the manufacturer's Declaration of Performance to BS EN 14388:2005. Acoustic results relate to the specimens tested in the laboratory; performance on site depends on site conditions and correct installation. The post schedule is not a site-specific structural design; the purchaser is responsible for obtaining one from a qualified engineer. Recycled plastic boards may show slight colour variation between production batches. ATF Supplies Nationwide Ltd reserves the right to amend specifications without notice. Please check you hold the latest revision.

ATF Supplies Nationwide Ltd · Registered in England No. 7875088 · VAT No. 125657800 · ISO 9001 and ISO 14001 certified. NoiseBloc™ is a trademark of ATF Supplies Nationwide Ltd.

Document	Revision	Date	Description
NB-TDS-ECO	A	October 2026	First issue

ATF
FENCING DELIVERED FASTER