

NoiseBloc™ Premium TGV

Reflective Timber Acoustic Barrier

A heavy-duty reflective timber noise barrier built from 200×47mm nominal tongue and groove boards laid horizontally, with a 100×47mm cover strip at every post. The interlocking boards give a continuous, gap-free acoustic screen with a superficial mass of 22.4kg/m², for roadside, residential and commercial boundaries where a premium, independently tested timber barrier is specified.

26dB
DL_R road traffic
BS EN 1793-2:2018

28dB
DL_R railway
BS EN 16272-2:2023

22.4kg/m²
Superficial mass
47mm TGV boards

4.8m
Board lengths spanning
3 posts at 2.4m centres

KEY SPECIFICATION

System type	Reflective, single-sided timber barrier
Acoustic boards	200×47mm nominal TGV, 180mm cover, laid horizontally tongue up
Board length	4.8m, spanning 3 posts at 2.4m centres
Cover strips	100×47mm at every post
Counter rail	100×47mm on the top front face
Capping	150×47mm
Posts	Timber 125×100mm or steel UB (see page 4)
Barrier height	1.98m to 7.0m standard; other heights on request
Treatment	Pressure treated to BS 8417: Use Class 4 ground contact, Use Class 3 above ground
Finish	Natural treated timber

WHY SPECIFY IT

- **Independently tested** in 2025 to the current road and rail standards, by a laboratory accredited by UKAS (No. 1262). Full reports available on request.
- **Heavy section:** 47mm boards with a measured superficial mass of 22.4kg/m².
- **Gap-free by design:** interlocking tongue and groove boards, with a cover strip sealing the board ends at every post.
- **Engineered to suit the site:** timber or steel posts, with indicative post sizes for early-stage design.
- **Matching gates** for pedestrian and vehicle access.
- **FSC® certified timber** available on request.

TYPICAL APPLICATIONS

Roadside and highways boundaries · Residential developments · Battery energy storage (BESS) sites · Commercial and industrial premises · Healthcare and education sites · Car parks

Standard details

Drawing NB-TGV-R-SD01 Rev A · reduced from A3, do not scale · DXF and A3 PDF available on request

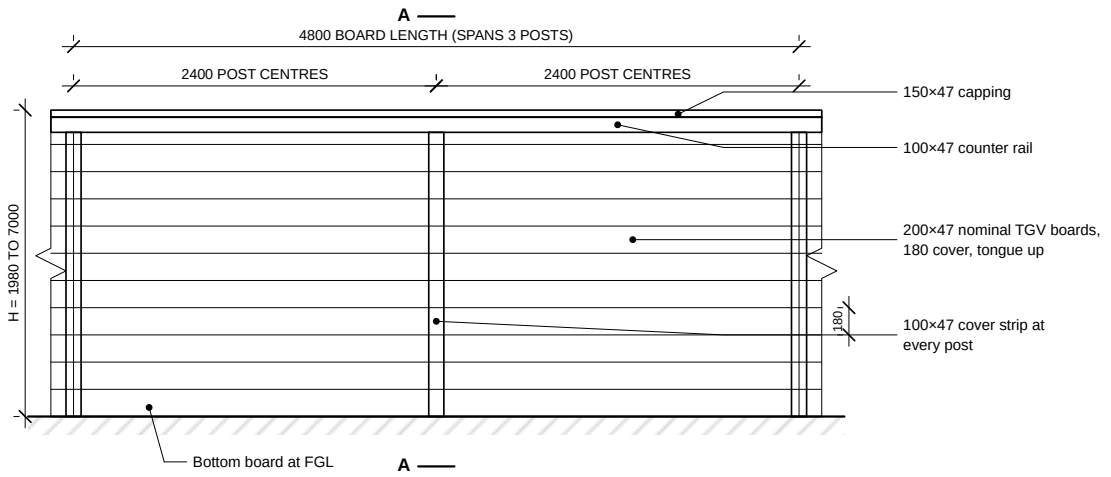

TG-01 TYPICAL FRONT ELEVATION **SCALE 1:50**

NoiseBloc™ Premium TGV Reflective

ATF Supplies Nationwide Ltd · 01264 366211 · atfsuppliesuk.com

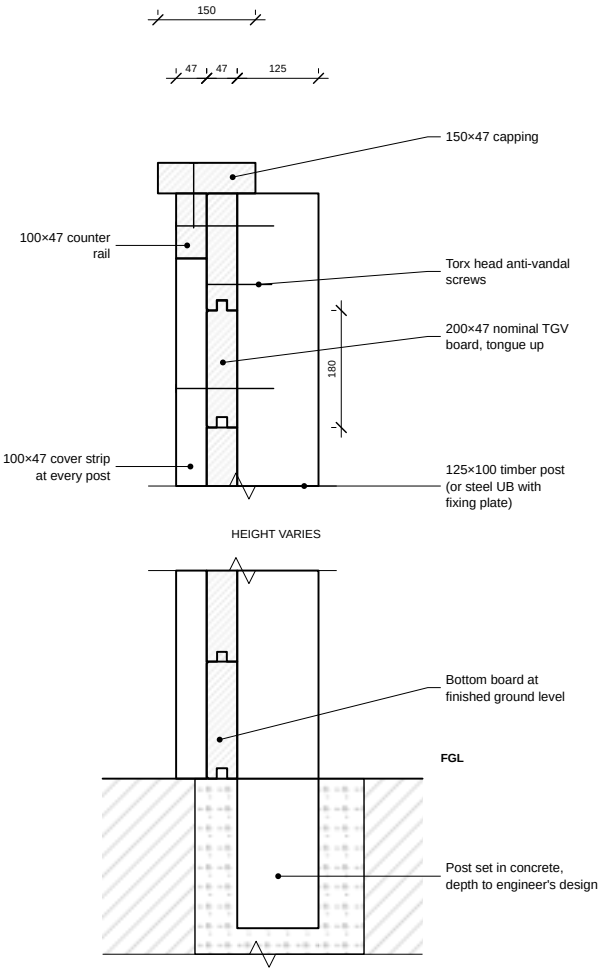

TG-02 SECTION A-A AT POST **SCALE 1:10**

NoiseBloc™ Premium TGV Reflective

ATF Supplies Nationwide Ltd · 01264 366211 · atfsuppliesuk.com

Drawing notes

1. All dimensions in mm. Typical details only; barrier height, post sizes and setting out to project drawings.
2. 200×47 nominal TGV boards, 180 cover, laid horizontally tongue up in 4.8m lengths spanning three posts; board joints on posts; bottom board at finished ground level.
3. Boards fixed to every post (or steel fixing plate) with Torx head anti-vandal screws.
4. 100×47 cover strip at every post, fixed through the boards into the post. 100×47 counter rail to the top front face. 150×47 capping.
5. Steel posts: 100×47 or 150×47 timber fixing plate, to suit the flange, bolted to the UB with M10×100 cup square hex bolts.
6. Post size, foundations and plate bolts to the structural engineer's design (indicative sizes on page 4).

Using these details

Each detail carries its own reference and the NoiseBloc™ and ATF Supplies details, so it can be copied straight into project drawings and specifications. CAD files (DXF) and the full A3 drawing sheet are available from ATF on request.

Standard details: plans

Drawing NB-TGV-R-SD01 Rev A · reduced from A3, do not scale

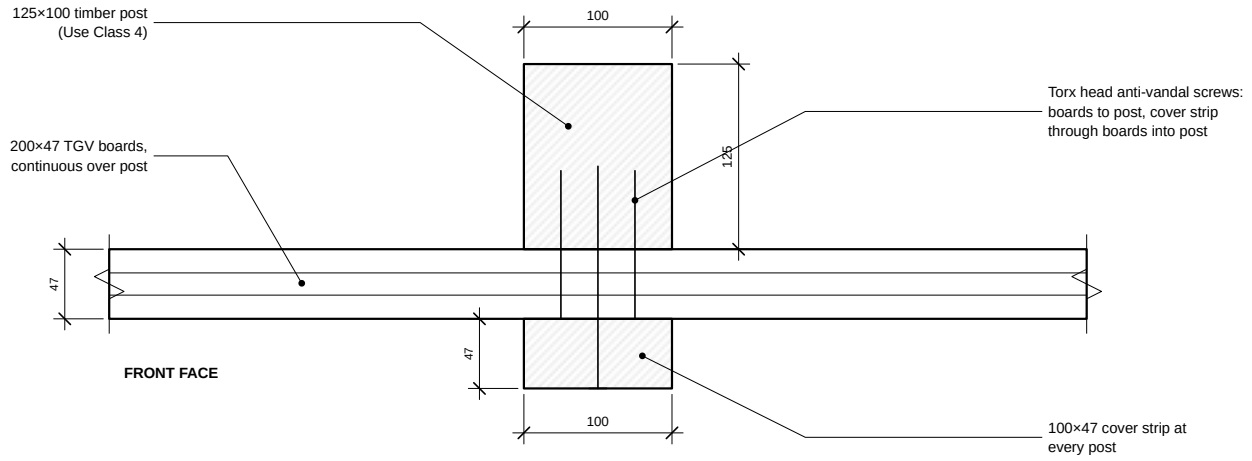

TG-03 PLAN AT INTERMEDIATE POST (TIMBER) — **SCALE 1:5**

NoiseBloc™ Premium TGV Reflective

ATF Supplies Nationwide Ltd · 01264 366211 · atfsuppliesuk.com

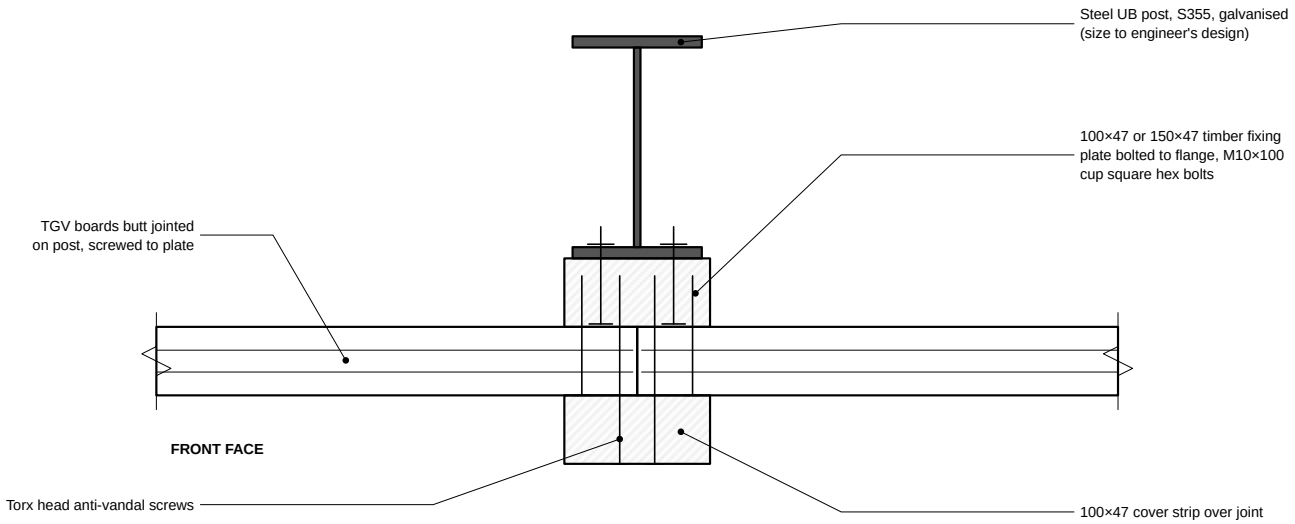

TG-04 PLAN AT BOARD JOINT (STEEL UB POST) — **SCALE 1:5**

NoiseBloc™ Premium TGV Reflective

ATF Supplies Nationwide Ltd · 01264 366211 · atfsuppliesuk.com

Components and materials

Component	Size (mm)	Specification	Function
Acoustic board	200×47 nominal	Tongue and groove, 180 cover, 4.8m lengths; sawn softwood, pressure treated	Primary reflective layer
Cover strip	100×47	Sawn softwood, pressure treated; at every post	Seals board ends and joints
Counter rail	100×47	Sawn softwood, pressure treated; top front face	Stiffens the top of the barrier
Capping	150×47	Sawn softwood, pressure treated	Weathers board tops
Post (timber)	125×100	Softwood, Use Class 4; 15 year desired service life as standard, 20 or 40 year on request	Lower barriers
Post (steel)	UB, see table	S355, hot-dip galvanised to BS EN ISO 1461	Taller barriers
Fixing plate (steel posts)	100×47 or 150×47	Treated softwood, bolted to the UB with M10×100 cup square hex bolts; width to suit flange	Fixing for boards
Fixings	To suit	Torx head anti-vandal screws: boards to posts or plates; cover strips and counter rail through the boards	Secure, tamper-resistant fixing

SUPERFICIAL MASS

Layer	Coverage	kg/m²
TGV boards, 47mm	100%	22.4
Total (boards)		**22.4**

Measured from weighed samples of the tested boards. Posts, cover strips, counter rail and capping excluded. Compare kg/m² with kg/m², not with density (kg/m³).

WIND, NOT WEIGHT, SIZES THE POSTS

Post size is governed by wind load on the solid face of the barrier, not by its mass. All solid NoiseBloc™ timber barriers take the same wind load, so the post sizes below apply equally to Premium TGV and Board & Batten.

Timber posts (125×100mm) suit lower barriers on run positions in standard wind areas, indicatively up to about 1.85m. Taller, end-zone or more exposed barriers use steel UB posts.

INDICATIVE STEEL POST SIZES (S355 UB, 2.4m post centres)

Barrier height	Standard wind		Exposed wind	
	Run posts	End-zone posts	Run posts	End-zone posts
2.0m	127×76×13	127×76×13	127×76×13	127×76×13
2.5m	127×76×13	152×89×16	152×89×16	178×102×19
3.0m	178×102×19	203×102×23	203×102×23	203×133×25
4.0m	203×133×30	254×146×37	254×146×37	254×146×43

Run posts: more than 4 × barrier height from a free end. **End-zone posts:** within 4 × barrier height of a free end or a gap with no return corner (a return corner reduces the end-zone load). **Standard wind:** typically southern and central England, inland, low altitude. **Exposed wind:** northern England, Wales, Scotland and higher ground. Boards are 4.8m long and span three posts, so intermediate posts carry 25% more load than board-joint posts; the sizes allow for this. Barriers above 4.0m: steel posts to the engineer's design. Boards fix to a 100×47 or 150×47mm timber fixing plate bolted to the post flange.

Structural design: please read

Indicative sizes only, based on generic wind assumptions to BS EN 1991-1-4 (free-standing wall, terrain category II), with each post checked to BS EN 1993-1-1 as an unrestrained cantilever. Coastal, hilltop, funnelling and embankment sites, foundations and fixings are not covered. **Post sizes, fixings and foundations must be designed and signed off by a structural engineer for each project.** ATF can arrange a site-specific structural design on request (chargeable).

Acoustic performance

ROAD TRAFFIC NOISE

DL_R = 26dB

BS EN 1793-2:2018, rated with the normalised traffic noise spectrum of BS EN 1793-3:1998

RAILWAY NOISE

DL_R = 28dB

BS EN 16272-2:2023, rated to BS EN 16272-3-1:2023. Expanded uncertainty of the rating U = 2.4dB (95% confidence)

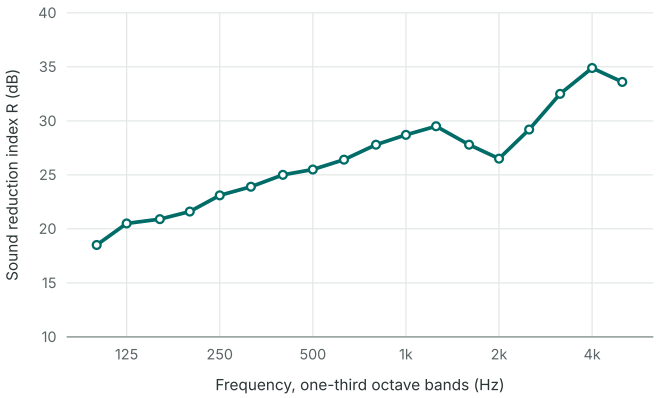

f (Hz)	R (dB)	f (Hz)	R (dB)
100	18.5	800	27.8
125	20.5	1000	28.7
160	20.9	1250	29.5
200	21.6	1600	27.8
250	23.1	2000	26.5
315	23.9	2500	29.2
400	25.0	3150	32.5
500	25.5	4000	34.9
630	26.4	5000	33.6

Test reference	07393-7418. One set of laboratory measurements, rated to both the road and rail standards
Date of test	6 November 2025
Test method	Laboratory airborne sound insulation under diffuse sound field conditions, conforming to BS EN ISO 10140-2:2021
Specimen	NoiseBloc™ Premium TGV Reflective, 3.6×2.8m (10.08m²)
Tested by	Independent laboratory accredited by UKAS (No. 1262) for testing to BS EN 1793-1 and -2. Full reports available on request.

Reading the numbers

DL_R is the single-number rating of the airborne sound insulation of the barrier construction itself, measured in a laboratory. It is not the noise reduction a receiver will experience on site.

The reduction on site (insertion loss) depends mainly on barrier height and length, the positions of the noise source and receiver, and ground conditions, because most sound reaches the receiver over and around the barrier rather than through it. As a rule of thumb, a barrier's sound insulation should be around 10dB higher than the insertion loss it is designed to achieve, so that sound passing through it does not limit performance. Your acoustic consultant will confirm the height and extent needed for your site.

Results relate only to the specimen tested. Performance on site depends on correct installation with no gaps.



NoiseBloc™ Premium TGV on a new development boundary.

Specification clause

For inclusion in project specifications. Edit the bracketed items to suit the project.

Acoustic barrier

Manufacturer: ATF Supplies Nationwide Ltd, Boundary House, 36a Walworth Road, Andover, SP10 5LH. Tel 01264 366211.

Product reference: NoiseBloc™ Premium TGV Reflective.

Acoustic performance: Airborne sound insulation DL_R not less than 26dB to BS EN 1793-2:2018 (road) / 28dB to BS EN 16272-2:2023 (rail), independently tested.

Superficial mass: Not less than 22kg/m² (boards).

Construction: 200×47mm nominal tongue and groove boards (180mm cover) laid horizontally, tongue up, in 4.8m lengths spanning three posts; 100×47mm cover strip at every post; 100×47mm counter rail to the top front face; 150×47mm capping.

Posts: [Timber 125×100mm, Use Class 4] / [Steel S355 UB to engineer's design, with 100×47 or 150×47mm timber fixing plate bolted to flange with M10×100 cup square hex bolts] at [2.4] m centres.

Height: [ ] m above finished ground level. **Length:** [ ] m.

Timber treatment: Preservative treated to BS 8417; posts and timber in ground contact to Use Class 4, above-ground components to Use Class 3 [unless specified otherwise]. [FSC® certified timber required.]

Fixings: Torx head anti-vandal screws throughout.

Installation: In accordance with the manufacturer's installation guide. The barrier shall be continuous and free from gaps.

INSTALLATION ESSENTIALS

- Set posts plumb at the specified centres, in concrete to the engineer's design.
- Lay the bottom board at finished ground level, tongue up, with no gap beneath.
- Build up the boards with tongues fully engaged, joints on posts, screwing each board to every post (or fixing plate).
- Fix a 100×47 cover strip at every post, screwed through the boards into the post.
- Fit the counter rail to the top front face, then the capping.
- Walk the line: check for gaps at the base, joints, posts and ends.

Installation guidance for NoiseBloc™ Premium TGV is available from ATF.

CARE AND MAINTENANCE

- Inspect annually and after severe weather; replace damaged or split boards promptly to keep the barrier gap-free.
- Keep vegetation and soil clear of the boards and the bottom board.
- Treat any cut ends with a suitable end-grain preservative during installation.
- A breathable stain or paint may be applied if a coloured finish is wanted.

ALSO AVAILABLE

NoiseBloc™ Board & Batten Reflective · NoiseBloc™ Board & Batten Absorptive · NoiseBloc™ Eco · Matching pedestrian and vehicle gates

TIMBER, TREATMENT AND DURABILITY

Timber	Sawn European softwood, pressure treated; FSC® certified timber available on request
Ground contact components	Posts and timber in ground contact preservative treated to Use Class 4, BS 8417
Above-ground components	Boards, cover strips, counter rail and capping preservative treated to Use Class 3, BS 8417, unless specified otherwise
Post service life	Timber: 15 year desired service life as standard; 20 or 40 year on request. Steel: hot-dip galvanised to BS EN ISO 1461, typically 40 years or more to first maintenance above ground in C2 to C3 (rural, suburban and inland urban) environments, per BS EN ISO 14713-1
Natural movement	Tongue and groove joints and cover strips at every post keep the barrier sealed as the boards season

Important notes. Information in this datasheet is given in good faith and is correct at the date of issue. Acoustic results relate only to the specimen tested in the laboratory; performance on site depends on site conditions and correct installation. Indicative post sizes are not a structural design; the purchaser is responsible for obtaining a site-specific structural design from a qualified engineer. Natural timber varies in colour, grain and moisture content and may develop surface checks, which do not affect acoustic performance. ATF Supplies Nationwide Ltd reserves the right to amend specifications without notice. Please check you hold the latest revision.

ATF Supplies Nationwide Ltd · Registered in England No. 7875088 · VAT No. 125657800 · ISO 9001 and ISO 14001 certified · FSC® and PEFC chain of custody certified (certified products on request). NoiseBloc™ is a trademark of ATF Supplies Nationwide Ltd.

Document	Revision	Date	Description
NB-TDS-TGV-R	A	October 2026	First issue

FENCING DELIVERED FASTER